CMWTEC technologie GmbH

NEWS 2014/2015

PRODUCTNEWS AND INFORMATIONS

DEAR CUSTOMERS AND INTERESTED PARTIES,

Tradition and Progress – many years of experience and know-how, our sense to the demands of the market, as well as a cooperative and trusting co-operation with our customers set us apart. We constantly develop further for you, to provide you with new innovative solutions for your business.

With this Newsletter we would like to show you our latest product and developments, as well as some interesting information about our company.

Stay interested, sincerely

Ingrid Wipperfürth
(Managing Director)

CONTACTLESS AND PRECISE

FINAL TERMINAL CHECK MACHINE

Measuring Process by 3D-Laser

The machine is used for checking the positive and negative terminals of batteries in a finishing line. After the measuring process with a three-dimensional laser the plc software evaluates the measuring results.
The terminal check machine avoids disturbances in the subsequent machines.

ADVANTAGES AND ATTRIBUTES

- test of battery terminal height and diameter
- precision of measuring process
  height: +/- 0,1mm; Ø: +/- 0,5mm
- contactless measuring process
- interface to read out test data
- reject table for failed batteries
- fully automatic check process
- short change over time
- adjustable limit
- processing for DIN
  and JIS terminal

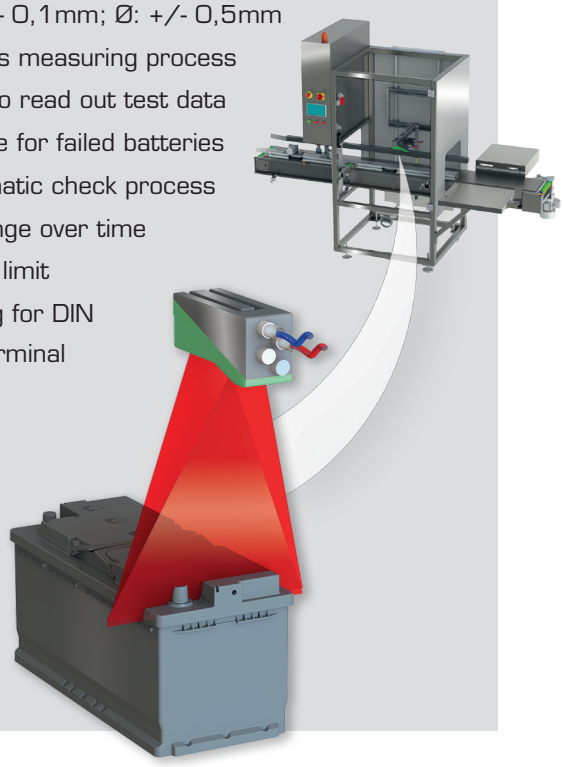

OUR HIGH-END TOP MACHINE FROM OUR PRODUCT RANGE – COMPLEX AND PROCESS CAPABLE

AUTOMATIC PLUG INSERTION MACHINE

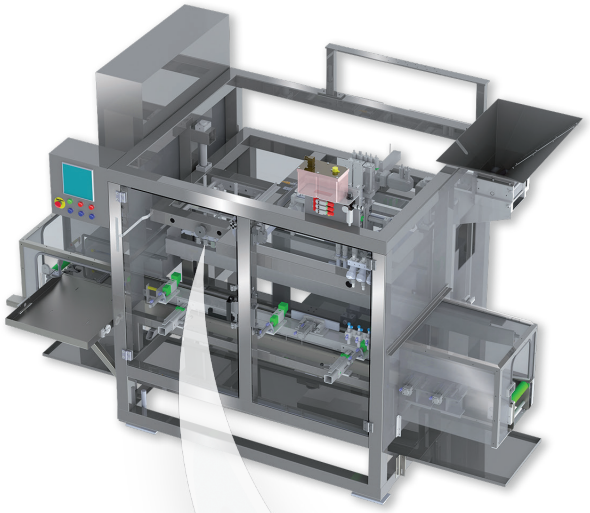

Comply with OEM Standards

The machine is used for sealing batteries following the battery container formation after leveling machine. The batteries are sealed simultaneously by means of single plugs, before approaching the washing machine. The process is controlled by a separate test unit with single test modules. Over 30 Years advancement and experience. More than 100 units sold worldwide.

- variable screw-in tool design
- pick up by vacuum
- changeover < 2 minutes

ADVANTAGES AND ATTRIBUTES

- automatic battery setup at the HMI panel
- processing of different plug types in one machine
  - screw-in plugs
  - push-in plugs
  - valve plugs
  - charge-eye plugs
- torque controlled electronic motors (option)
- monitoring of screw-in plug insertion
- height control after screw-in with tolerance measurement +/- 0,1 mm
- quick, precise servo technology
- short setup times
- processing for all types of car and truck batteries

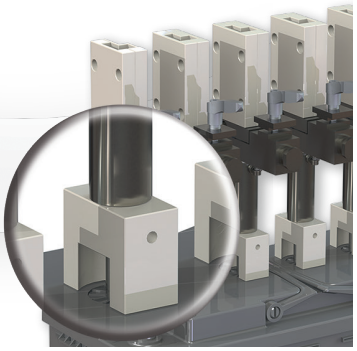

- screw-in height control
- single plug measuring
- lid reference
- tolerance +/- 0,1 mm
- adjustable limit

TOP SERVICE FOR SATISFIED CUSTOMERS

WE ADVISE YOU IN ALL AREAS OF THE FINISHING LINE AND DO NOT LEAVE YOU OUT IN THE RAIN.

With the delivery and installation of our machines we will not give up our responsibility. We place a high value on trustful and cooperative partnership. Therefore, we continue to be your first choice when it comes to finding a solution for your problem. It even goes so far that if necessary we will also come to you personally. Because with us service is not a blank promise but part of our philosophy!

DID YOU KNOW....?

... that our customers come from 31 different countries?

... that we have supplied 1.458 machines worldwide in the last 32 years?

... that our CMWTEC technology Made in Germany is valued in India, China, North and South America, Russia, South Africa, Australia and Europe?

... that we travel per year, about 183.000 miles, for you on the airplane? Thus we have surrounded the earth about 196 times in the last 32 years!

FAST AND PRECISE.
TYPICALLY MADE IN GERMANY, TYPICAL CMWTEC

AUTOMATIC ACID/GEL VACUUM FILLING MACHINE FOR AGM/VRLA

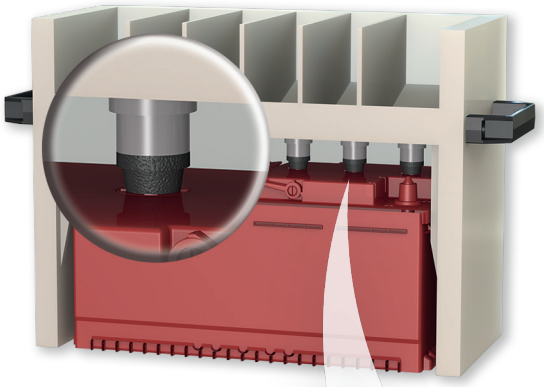

VOLUMETRIC FILLING SUPPORTED BY VACUUM (VACBOX) AND FILLING JIG

The machine is used for initial filling before container formation, by volumetric supply monitoring each individual cell by flow meter; supported by vacuum and filling jig. CMWTEC has a patented VACBOX system to avoid any deformation of the battery during the filling process. The integrated filling jig system with anti tripping filling valve inside the box reduces the filling time to < 30 seconds per battery.

ADVANTAGES AND ATTRIBUTES

- controlled positioning of the battery
- predefined exact fill quantities +/- 0,3% of volume
- patented filling system with VACBOX
- clean filling
- anti-dripping system
- verifiable results
- battery evacuation inside and outside of the battery box, up to 90% vacuum possible.
- filling with patented filling jig system
- avoiding air inclusions while filling
- increasing the accumulation of electrolytes at the plates
- production of batteries with a higher performance
- processing for all types of car and truck batteries

- rail-guided control
- variable sealing design for all types of car and truck batteries
- no dripping
- modular system
- optimal acid distribution

Technology
[made in Germany]

MACHINE PRODUCT PORTFOLIO

AUTOMATIC AND FULLY AUTOMATIC MACHINES FOR SLI/GEL AND AGM AUTOMOTIVE CAR AND TRUCK BATTERIES

- Acid Filling Machine – Initial Filling, Leveling, Refilling (after Dumping), Filling and Sipping
- Volumetric GEL Filling Machine
- Volumetric Filling Machine under Vacuum [VACBOX] (AGM/VRLA/Spiral Batteries)
- Acid Level Control Machine
- Degassing Bottle Insertion Machine
- Dumping Machine
- Plug Insertion Machine – Single Plugs, Charge-Eye Plugs
- Washing & Drying Machine
- Washing Machine
- High Voltage Leakage Test Machine
- Final Terminal Check Machine
- High Rate Discharge Test Machine
- OCV Test Machine
- Air Leak Test Machine
- Post Brushing Machine
- Post Greasing Machine
- Anti-Static Spray Machine
- Pin Marking Machine
- Hot Stamp Marking Machine
- Laser Code Marking Machine
- Labeling Machine, - Bypass Labeling, Application Stamping, Print Labeling

Combination of different machines on request.

Please approach us, we will be pleased to inform you about our other products.

CMWTEC technologie GmbH
Grossmannswiese 14 ■ D-65594 Runkel-Ennerich ■ phone +49(0)64 31.9 92 40 ■ fax +49(0)64 31.7 44 43
info@cmwtec.de ■ www.cmwtec.de